LED preset counters	Multifunction – pulse, frequency, time (AC+DC)	Codix 716 / 717 (Ex)

The Codix 716 / 717 can be used universally. These preset pulse counters, tachometers or preset timers with up to 2 presets can solve a wide variety of control and monitoring tasks in every application.

With their LED display the counters are very easy to read and simple to programme by means of cursor keys.

Available with optional interfaces or as Ex-proof version.

DC 10 ... 30 V | AC 100 ... 240 V — Power supply
Multifunction
IP65 — High protection level
max. 20 kHz — High count frequency
1 or 2 — Presets
PNP/NPN — Type of input
- 10° + 50° — Temperature range
000000 DIN 48 x 48 — DIN front bezel
Plug-in screw terminal
123... 6 LED — LED display
RS 232 485 422 — Interface
Ex protection

Multifunction

- Counter, tachometer and timer in one device
- 716: 1 preset, 717: 2 presets
- Relay or optocoupler outputs
- Many different count modes for pulse inputs, time and frequency
- Scalable display using multiplication factor 0.0001-99.9999
- Multi-range power supply 100 ... 240 V AC ±10%, 10 ... 30 V DC
- Ex-proof version available
- Option: with serial interface RS232, RS422, RS485

Fast and user-friendly

- Direct input of the presets via 4 large front keys
- Fast installation thanks to plug-in screw terminals
- Max. count frequency 20 kHz
- LED annunciators for the displayed preset and for the output status
- Minimal installation depth
- Adding or subtracting counting, also with automatic reset
- Key lockout

Order code

6.71 X . 0 1 X . X XX . Ex
(a) (b) (c) (d) (e)

a *Numbers of presets*
6 = 1 preset [1)]
7 = 2 presets [1)]

b *Outputs*
0 = relays [1)]
1 = optocoupler

c *Power supply*
0 = 100 ... 240 V AC, ± 10% [1)]
3 = 10 ... 30 V DC [1)]
5 V input level: order code: 7.XXX.01X.XXX.9382

d *Interface*
00 = none [1)]
05 = RS232
06 = RS422
07 = RS485

e *Optional*
(only for a = 7, b = 0, d = 00)
Ex-proof housing acc. to explosion-proof class EEx D IIC T6 with encapsulated cable 2 x 3 m, various mounting parts, PTB approval certificate, with keys approved for explosive gas atmosphere (for explosive dust atmosphere on request)

Delivery specification
- Counter 716 / 717
- 1 screw terminal 7 pin, RM 5.08
- 1 screw terminal 7 pin, RM 3.81
- 1 front bezel for screw mounting, panel cut-out 50 x 50 mm [1.97 x1.97"] - T008860
- 1 front bezel for clip mounting, panel cut-out 50 x 50 mm [1.97 x1.97"] - T008853
- 1 mounting clip
- 1 template for cut-out
- 1 operating instruction

1) Stock types

© Fritz Kübler GmbH, subject to errors and changes. 09/2014

LED preset counters | Multifunction – pulse, frequency, time (AC+DC) | Codix 716 / 717 (Ex)

Accessories	Dimensions in mm [inch]		Order-No.
Adapter front bezel, 72 x 72 [2.83 x 2.83]	For cut-out 68 x 68 [2.68 x 2.68] to cut-out 45 x 45 [1.77 x 1.77] (Mating clip T009420 must be ordered separately)	black mating clip	**T008177** **T009420**
Adapter front bezel, ø 72 [2.83]	For cut-out ø 60 [2.36] to cut-out 45 x 45 [1.77 x 1.77] with clip mounting for counters 48 x 48 [1.89 x 1.89]	black	**N510226**
Sealing cover type K2, IP65	Suitable for front bezel 75 x 60 [2.95 x 2.36] with screw mounting	transparent/black	**G008303**
Transparent cover, IP65	For cut-out 50 x 50 [1.97 x 1.97], with screw mounting for counters with cut-out 45 x 45 [1.77 x 1.77] and front bezel 48 x 48 [1.89 x 1.89]	lockable key lockable	**G008143** **G008153**
Mounting frame with cut-out 50 x 50 [2.36 x 2.36] via separate adapter also for 45 x 45 [1.77 x 1.77]	For snap-on mounting on 35 [1.38] top-hat DIN rail, for counters 48 x 48 [1.89 x 1.89], 53 x 53 [2.09 x 2.09] and 55 x 55 [2.17 x 2.17]	chromated	**G300003**
Replacement parts			
7-pin connector	1 ... 7, pitch 5.08		**N100548**
7-pin connector	1 ... 7, pitch 3.81		**N100387**
5-pin connector	1 ... 5, pitch 3.81		**N100399**

Suitable gaskets as well as further accessories can be found in the accessories section or in the accessories area of our website at: www.kuebler.com/accessories.

Technical data

General technical data

Display	6 digits, red 7 segment LED display; 8 mm [0.32] high
Operating temperature	-10°C ... +50°C [+14°F ... +122°F] (non-condensing)
Storage temperature	-25°C ... +75°C [-13°F ... +167°F]
Altitude	up to 2000 m [6562']

Electrical characteristics

Power supply		10 ... 30 V DC, max. 1.2 W with reverse polarity protection and galvanic isolation 100 ... 240 V AC, ±10%, max. 9 VA
Data retention		min. 10 years or 10^6 memory cycles
Sensor power supply		24 V DC -40 %/+15 %, 100 mA for AC version
EMC	Emitted interference Immunity to interference	EN 55011 class B EN 61000-6-2
Device safety	Designed to Protection class Application area	EN 61010 part 1 2 Pollution level 2
UL approval		File-No.: E128604

Mechanical characteristics

Protection		IP65 (front side)
	Ex version	IP54
Weight		ca. 200 g [7.05 oz]
	Ex version	2 kg [70.55 oz]

Only for Ex-proof
- Counter in Ex-proof version acc. to explosion-proof class EEx D IIC T6
- Encapsulated cable 2 x 3 m [2 x 9.84']
- PTB approval no. PTB 03 ATEX 1131
- Hardcoated AL-housing
- Function mode as type 717
- Additional fuse / 0.1 A
- For explosive gas atmosphere (for explosive dust atmosphere on request)

© Fritz Kübler GmbH, subject to errors and changes. 09/2014

Preset counters, electronic

LED preset counters | **Multifunction – pulse, frequency, time (AC+DC)** | **Codix 716 / 717 (Ex)**

Inputs		
Counting inputs		2 counting inputs, 4 types of programmable inputs
Polarity of the inputs		programmable, common for all inputs
Input resistance		approx. 10 kΩ
Counting frequency		20 kHz, can be reduced during set-up to to 30 Hz
Minimum pulse duration for control inputs		5 ms
Switching level DC	LOW HIGH	0 ... 0.2 x U_B [V DC] 0.6 x U_B ... 30 V DC
Switching level AC	LOW HIGH	0 ... 4 V DC 12 ... 30 V DC
Pulse shape		any shape (Schmitt-Trigger)

Outputs		
Output 1	Relay	with potential-free contacts, programmable as normally-closed (NC) or normally-open (NO)
	switching voltage	max. 250 V AC/125 V DC
	switching current	max. 3 A
	switching current at DC	min. 30 mA
	switching power at DC	90 W
	switching power at AC	max. 750 VA
or npn-optocoupler		with open collector and emitter
	switching power	30 V DC/15 mA
Output 2	Relay	with potential free switching contact, programmable opening or closing
	switching voltage	max. 250 V AC/300 V DC
	switching current	max. 3 A
	switching current at DC	min. 30 mA
	switching power at DC	50 W
	switching power at AC	max. 2000 VA
or npn-optocoupler		with open collector and emitter
	switching power	30 V DC/15 mA
Accuracy	with frequency meter mode	<0.1 %
	with timer / hout meter counter mode	±50 ppm
Output response time	relay	approx. 7 ms
	optocoupler	approx. 2 ms

Inputs

2 counting inputs
The maximum frequency is 20 kHz (20 kHz in the phase discriminator mode); it can be reduced to 30 Hz.

Gate
Static gate input
Pulse count mode: no counting, when the input is active
Timer mode: counting when active gate.lo or not activated gate.hi programmable

Reset
Dynamic reset input with the same function as the reset key. Resets the counter to zero, when counting up and sets it to the preset value when counting down

Key
Static key lock input. The keys are locked as long as this input is on. The preselection display key "P" remains active.

Interfaces
The devices can be fitted with the optional RS232, RS422 or with the RS485 interfaces. These interfaces can be used to program the devices as well as for remote reading. They are simply controlled by ESC sequences, max. 4800 Baud

Programming

The programming of the counter is carried out via 4 keys. The user interface is menu-driven and is shown on the display. The devices can be used as:

- Preset pulse counters
- Tachometers
- Preset timers

The following functions can be programmed:

Input polarity
Positive (PNP) or negative (NPN). The selection is valid for all inputs.

Pulse or time counting modes
- adding with counting; start at 0
- subtracting with counting start at the preset (716) and at preselection 2 (717)
- adding with automatic reset when the preset (716) or the preset 2 (717)is reached
- subtracting with automatic positioning at the preset (716) or preset 2 (717) when 0 is reached

Input types in pulse counter mode:

Cnt.Dir 1	1 counting input 1 counting direction input
uP.dn	Differential counting - 1 adding input - 1 subtracting input
quad	Phase discriminator to connect encoders with 2 signals shifted by 90°
quad2	Phase discriminator with double pulse processing, to connect pulse sources with 2 signals shifted by 90°

Decimal places
Data can be displayed without, with one, two or three decimal places.

Factor
For an optimum matching of the measuring signal, the displayed values can be weighted by a scale factor between 0.0001 and 99.9999.

Output signal
The function of the output signal can be preselected (independently for both outputs of model 717) as a normally closed, normally open or a negative pulse signal.

Maximum counting frequency
The maximum counting frequency can be set to 30 Hz or 20 kHz.

Timer
Counting can be carried out in h, min, s or in h:min:s. The number of decimal places determines the resolution. A resolution up to the ms-range can be achieved.

© Fritz Kübler GmbH, subject to errors and changes. 09/2014

LED preset counters | **Multifunction – pulse, frequency, time (AC+DC)** | **Codix 716 / 717 (Ex)**

Terminal assignment

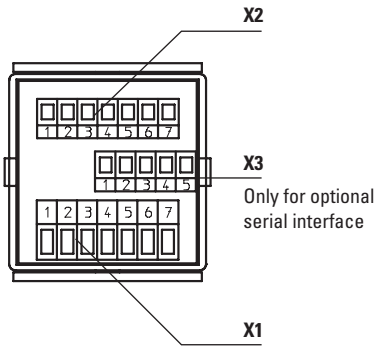

Pin	Connection X1		
1	Output 1	Relay	Collector for optocoupler output
2	Output 1	Relay	Emitter for optocoupler output
3	Output 2	Relay common contact (C)	Emitter for optocoupler output
4	Output 2	Relay closing contact (NO)	n.c.
5	Output 2	Relay opening contact (NC)	Collector for optocoupler output
6	Power supply	*AC version* 100 ... 240 V AC, ±10%	*DC version* 10 ... 30 V DC
7	Power supply	100 ... 240 V AC, ±10%	0 V DC (GND)

Pin	Connection X2		
1	Sensor power supply	*AC version* +24 V DC	*DC version* n.c.
2	0 V DC (GND)	0 V DC (GND)	n.c.
3	INP A count input A		
4	INP B count input B		
5	Reset input		
6	Gate input		
7	Input for key lock		

Pin	Connection X3		
	RS232	*RS422*	*RS485*
1	GND	–	–
2	RxD	RI+	DO/RI+
3	TxD	RI-	DO/RI-
4	RTS	DO+	–
5	CTS	DO-	–

© Fritz Kübler GmbH, subject to errors and changes. 09/2014

LED preset counters | **Multifunction – pulse, frequency, time (AC+DC)** | **Codix 716 / 717 (Ex)**

Dimensions

Dimensions in mm [inch]

Panel cut-out 45 x 45 [1.77 x 1.77]

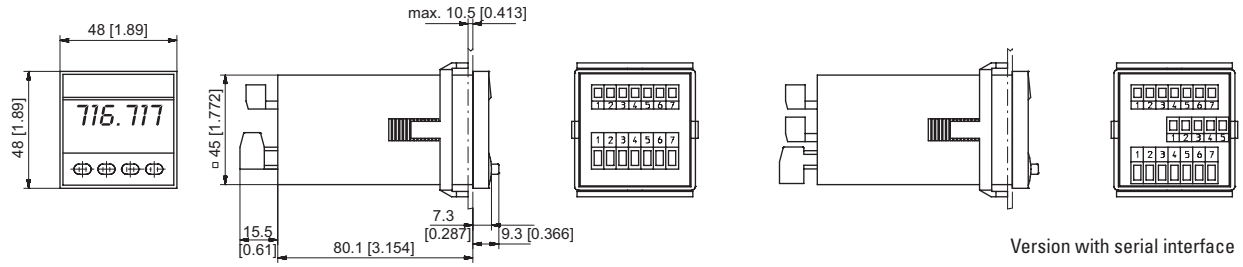

Version with serial interface

With front bezel 55 x 55 [2.17 x 2.17], panel cut-out 50 x 50 [1.97 x 1.97]

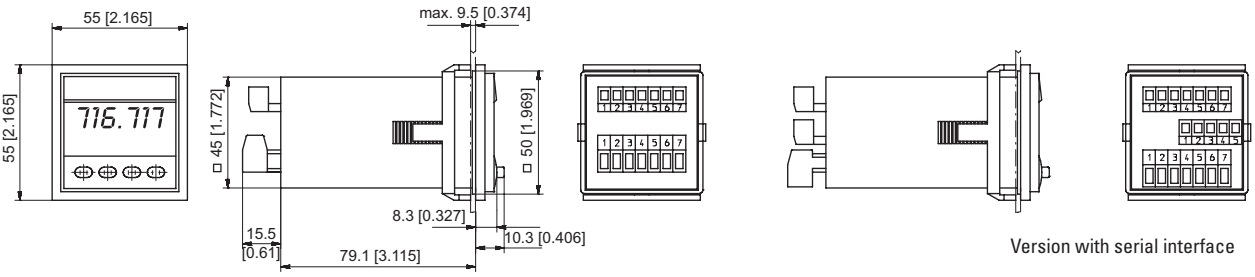

Version with serial interface

With front bezel 60 x 75 [2.36 x 2.95], panel cut-out 50 x 50 [1.97 x 1.97]

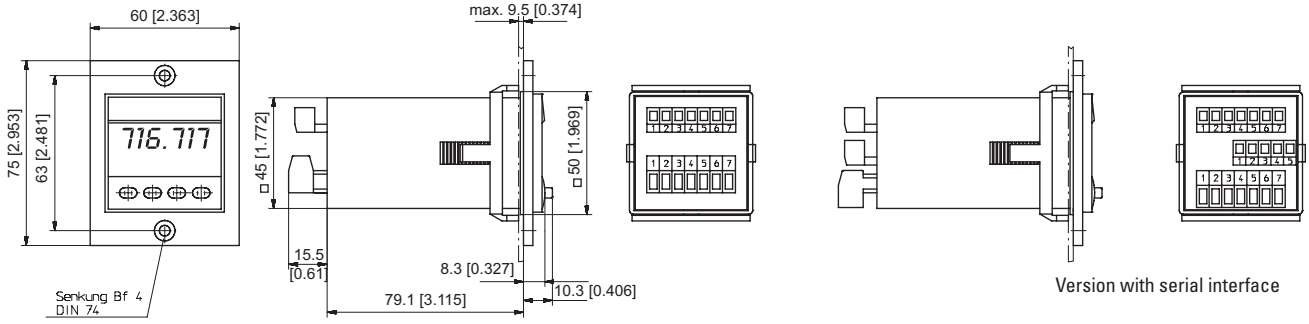

Version with serial interface

Ex version

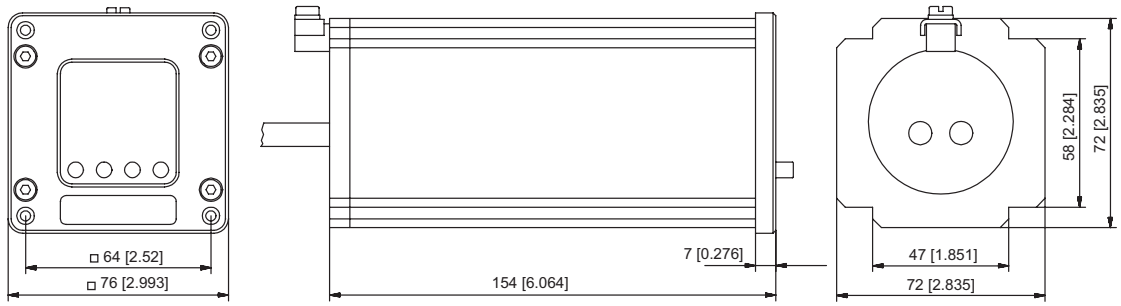

© Fritz Kübler GmbH, subject to errors and changes. 09/2014